Translated from German to English - www.onlinedoctranslator.com

EM2S DCF
Receiver module DCF 77.5 kHz

The EM2S DCF receiver module, together with a ferrite antenna (77.5 kHz), forms a complete, voltage-stabilized reception and demodulation unit for the German time signal transmitter DCF77. The demodulated DCF signal is provided at the module's signal output (LP3) at the level of the original DCF signal for further processing (decoding).

Dimensions-mm-:

* Tolerances = - 0.2 mm
Pad dimensions: 2.6 mm x 2 mm; bore = 1 mm

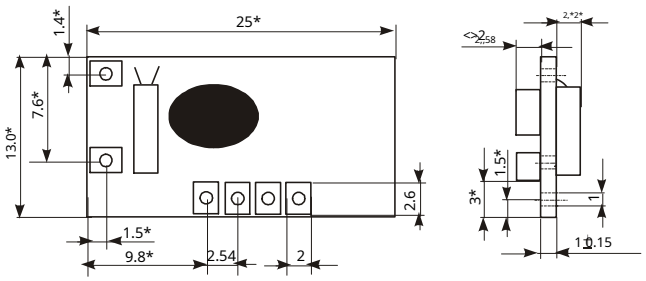

Pin assignment:

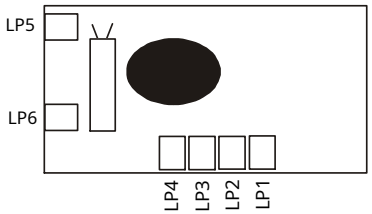

LP1 - GND
LP2 - PON
LP3 - DCF
LP4 - UB
LP5 - ANT1
LP6 - ANT2

Technical data (Unless otherwise defined, the information applies to: U_B=3V; T_{amb}=25°C)

parameter	Condition	symbol	min.	typical	max.	Unit
Receive carrier frequency		f		77.5		kHz
Rated operating voltage	T_{amb}= -10...60°C	U_B	3		12	V
Operating voltage range; Max.	T_{amb}= -10...60°C	U_{Bmax}	2.2		15	V
Current consumption (without load!)	U_{PON}=0V	I		0.1	0.15	mA
Quiescent current; receiver = OFF ("Stand by")	U_{PON}=open	I			2	µA
Current consumption; receiver = ON (without load!)	U_{PON}=0V	I		0.1	0.15	mA
Switching voltage (pin PON) 2)	LOW active	U_{PON}				V
Receiver = OFF; standby mode			0.7* $U_{PON\ max.}$		$U_{PON\ max.}$	V
Receiver = ON ; PON active			0		0.3* $U_{PON\ max.}$	V
$U_{PON\ max.}$		$U_{PON\ max.}$			2.2	V
Switching current	U_{PON}= 0V	I_{PON}			20	µA
Settling time		$t_{set\ up}$			3	s
Input sensitivity						
a) with generator supply		$V_{IN\ min.}$		0.30	0.60	$µV_{RMS}$
b) with antenna with undisturbed reception	1); e.g. with FTD02011R	E			25	µV/m
Antenna matching		$R_{Res.}$		500		kΩ
Input capacitance (LP5 – LP6)	Tolerance C_{IN}: +/- 20%	C_{IN}		18		pF
Output stage (on LP3)	Open collector; NPN					
Output voltage		U_A			30	V
Output current (driver power)		I_{OUT}	2		2000	µA
Output level at 100% 77.5kHz carrier	U_B	U_{OUT100}		U_A		V
Output level at 25% 77.5kHz carrier	U_B	$U_{OUT\ 25}$			0.4	V
Output pulse width	at standard pulse width t_{MOD}= 100ms t_{MOD}= 200ms	T_{WO100} T_{WO200}	70 170		130 230	ms ms
Operating temperature range	U_B= 3V... 12V	T_{amb}	- 10		60	°C
Storage temperature range		T	- 20		70	°C

1) Ferrite rod: Length = 60 mm; Diameter = 10 mm L =
Antenna resonant circuit: 897 µH; C = 4.7 nF; Q >100

2) internal pull-up resistor ($R_{PON\ int.}$= approx. 1 MΩ) is connected to GND with a switch

HKW-Elektronik GmbH
Industriestraße 12, D-99846 Seebach
TEL + + 49 36 929-82 330
FAX + + 49 36 929-82 339
kontakt@hkw-elektronik.de
www.hkw-elektronik.de

Standard wiring:

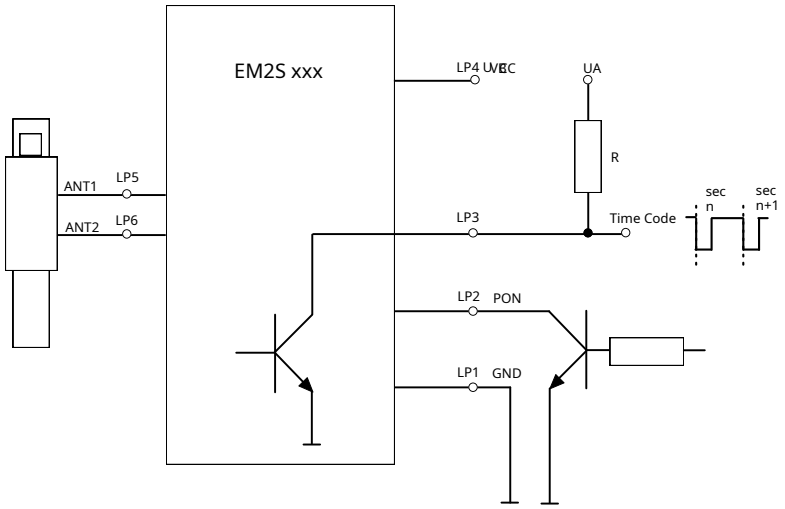

Resistance R (taking into account the permissible output current I_{out}) can be a discrete component or an integrated pull-up resistor of the connected controller input port.

As long as $U_A \leq UB_{max}$ LP4 can also be connected directly via U_A operated.

Order details:

Designation:	EM2S DCF Receiver module DCF 77.5 kHz (RoHS compliant)	Article no.:	FBD10030R

Subject to change!